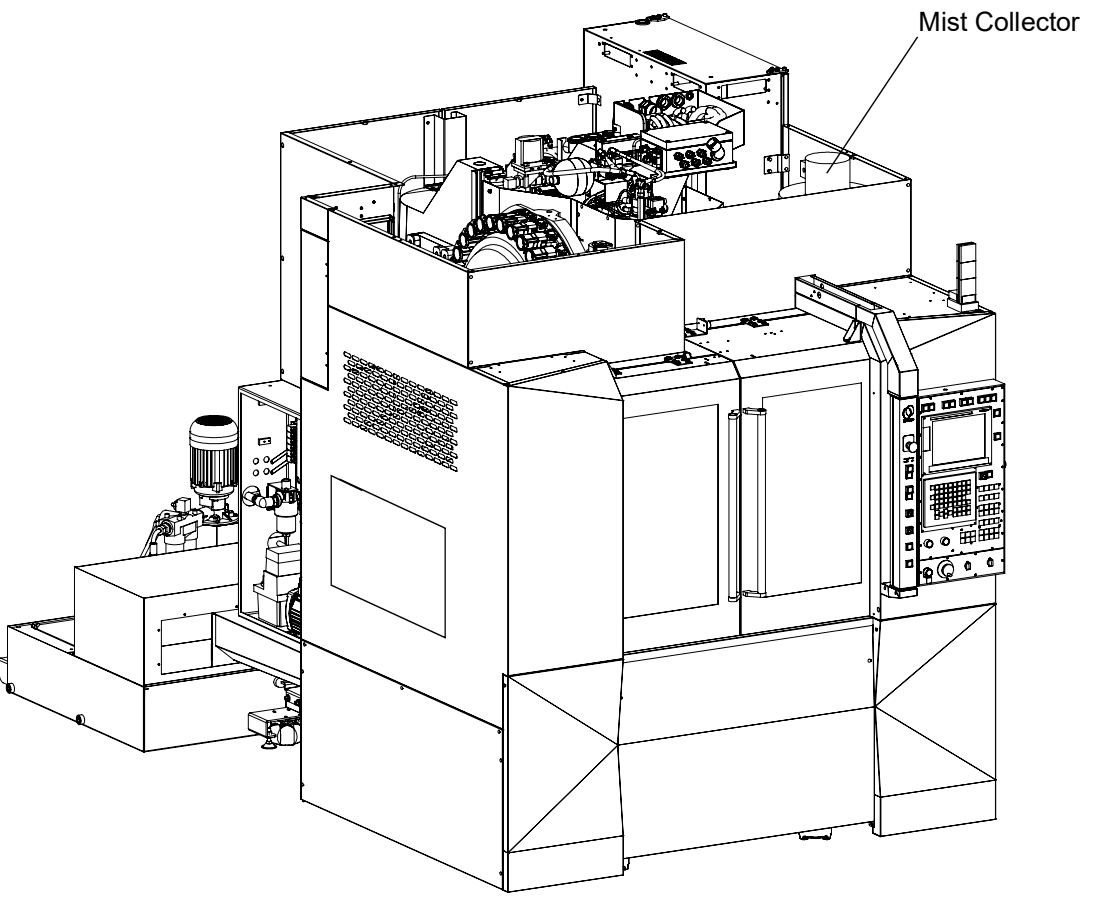
Mist Collector